PROSET SLEEVES

SERIES 49 SELF-SEAL COUPLING

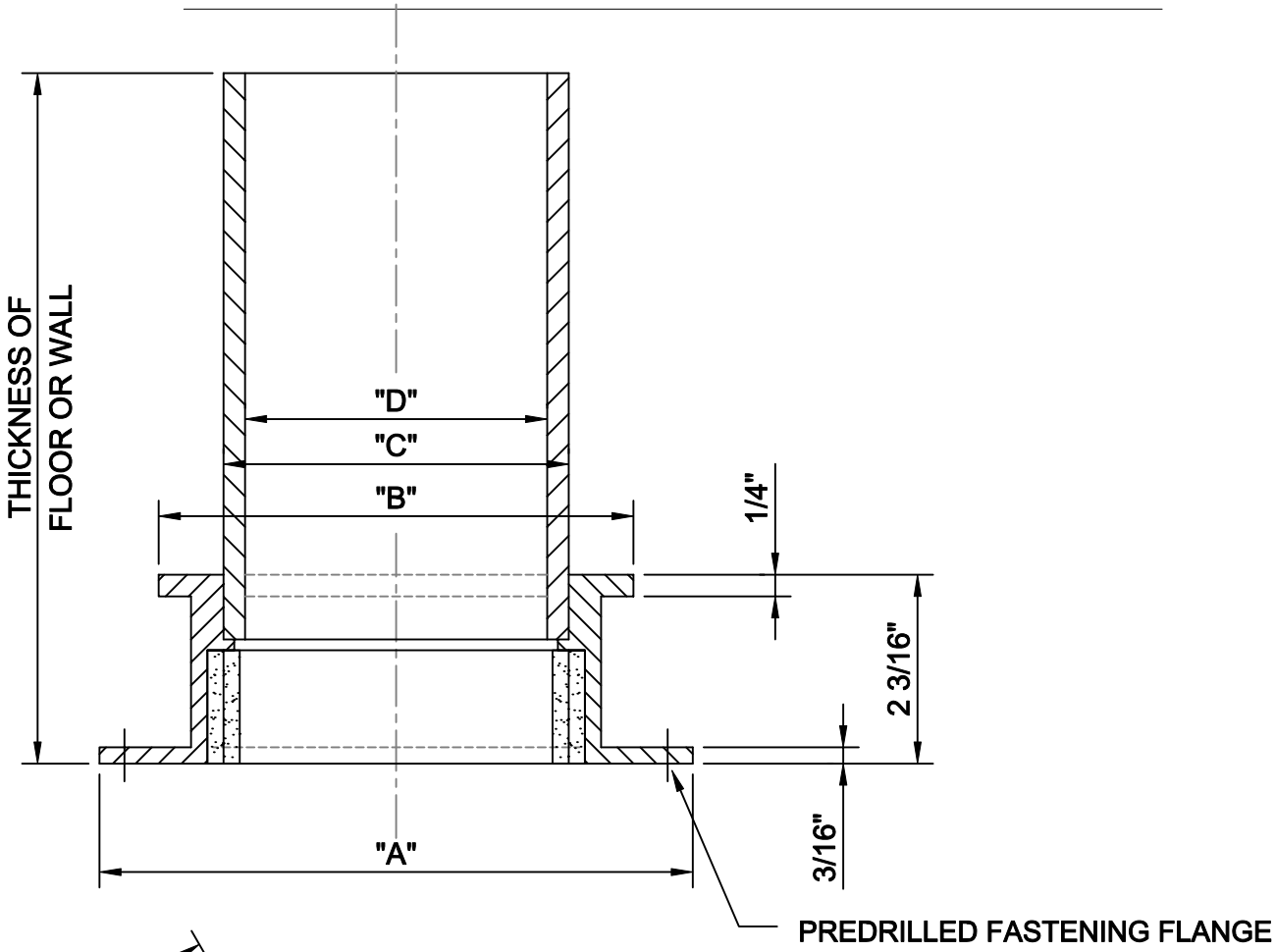

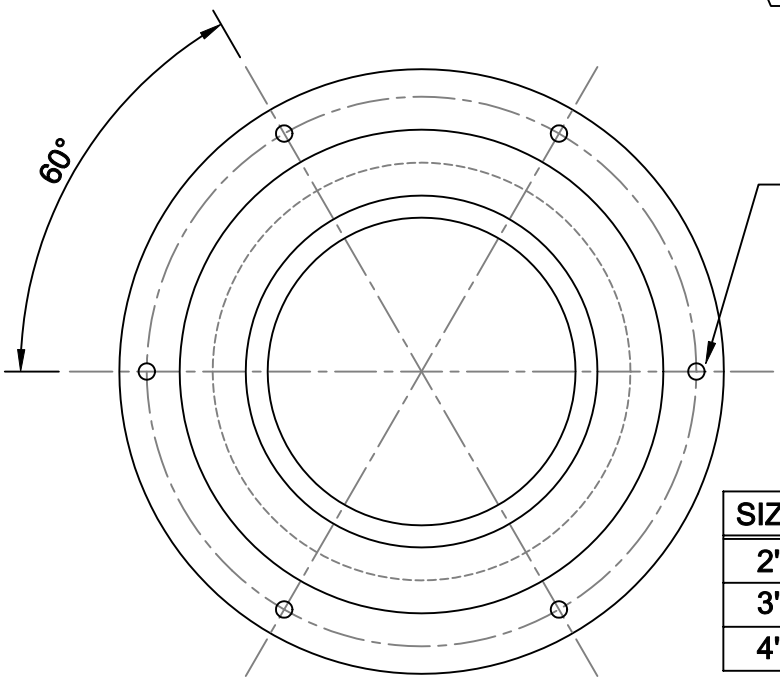

NOTE:
Components are constructed of
Type 1 fire rated PVC resin.
Flame spread rating 18 or less.

				RED	BLK	GRN
SIZE	"A"	"B"	"C"	"D"	"D"	"D"
2"	5"	3-7/8"	2-3/4"	2-1/2"	2-1/2"	2-1/2"
3"	6-7/8"	5-5/8"	4"	3-1/2"	3-1/2"	3-1/2"
4"	8-1/4"	7"	5"	XX	XX	XX

FUNCTION OF COMPONENT
Used as a self-sealing sleeve coupling
with built-in intumescent wrap strips.

PROSET® SYSTEMS
FIRESTOP PENETRATOR™

DATE : 12-3-98

DWG NO. P-49

PROSET SLEEVES

SERIES 43A COUPLING

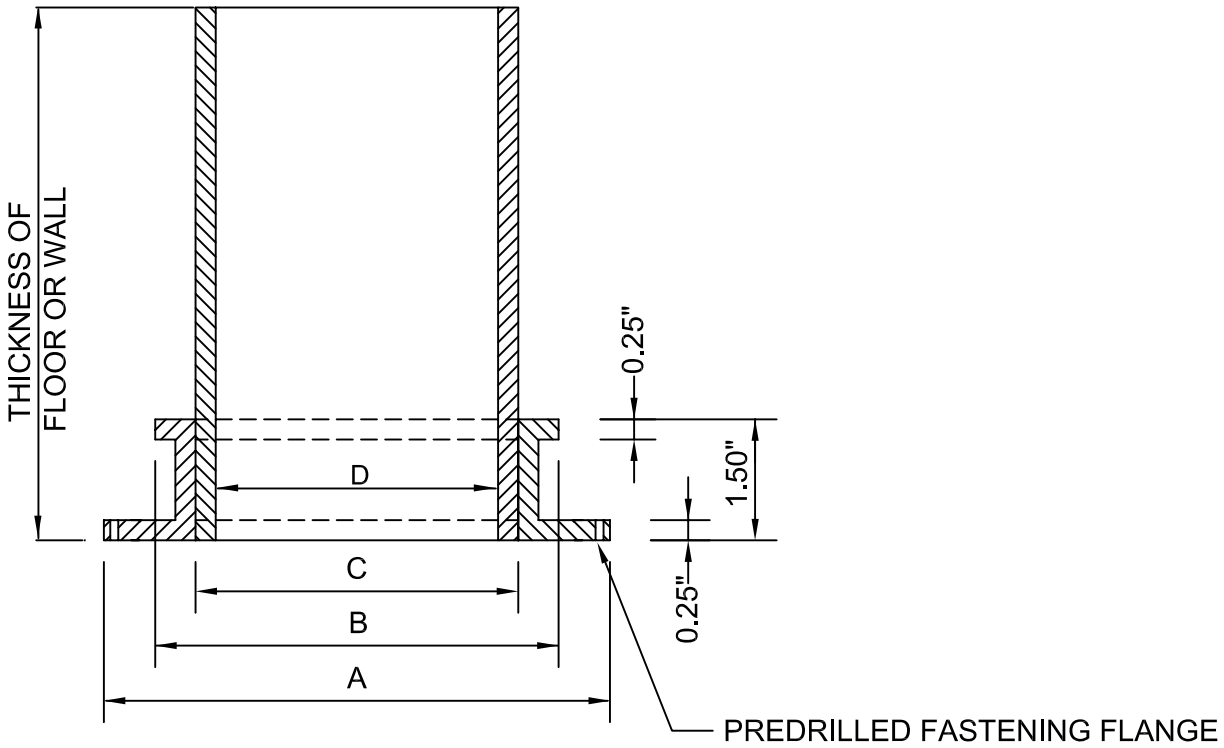

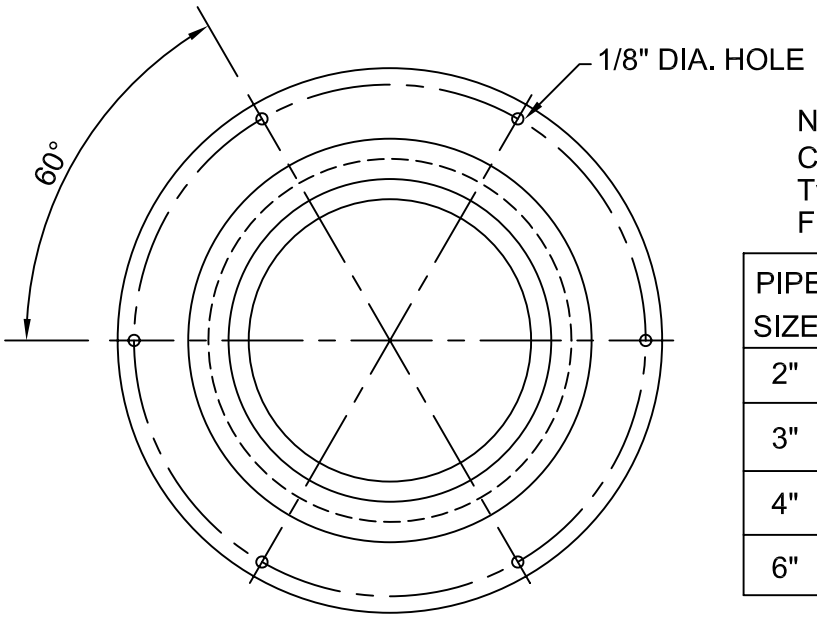

NOTE:
Components are constructed of
Type 1 fire rated PVC resin.
Flame spread rating 20 or less.

PIPE SIZE	DIMENSIONS (IN INCHES) A	B	C	D
2"	5.00	3.75	2.75	2.40
3"	6.27	5.02	4.02	3.52
4"	7.25	6.00	5.00	4.52
6"	9.52	8.27	7.27	6.65

FUNCTION OF COMPONENT

* Used as a fire rated sleeve or becomes an integral part of a plumbing fixture opening or stack thru concrete floors and walls.

PROSET® SYSTEMS
FIRESTOP PENETRATOR™

DATE : 3-1-92

DRG . NO . P - 43A

PROSET SLEEVES

RISER CLAMP DEVICE

CONCRETE ON WOOD FORM
FOR FLOORS OR WALLS

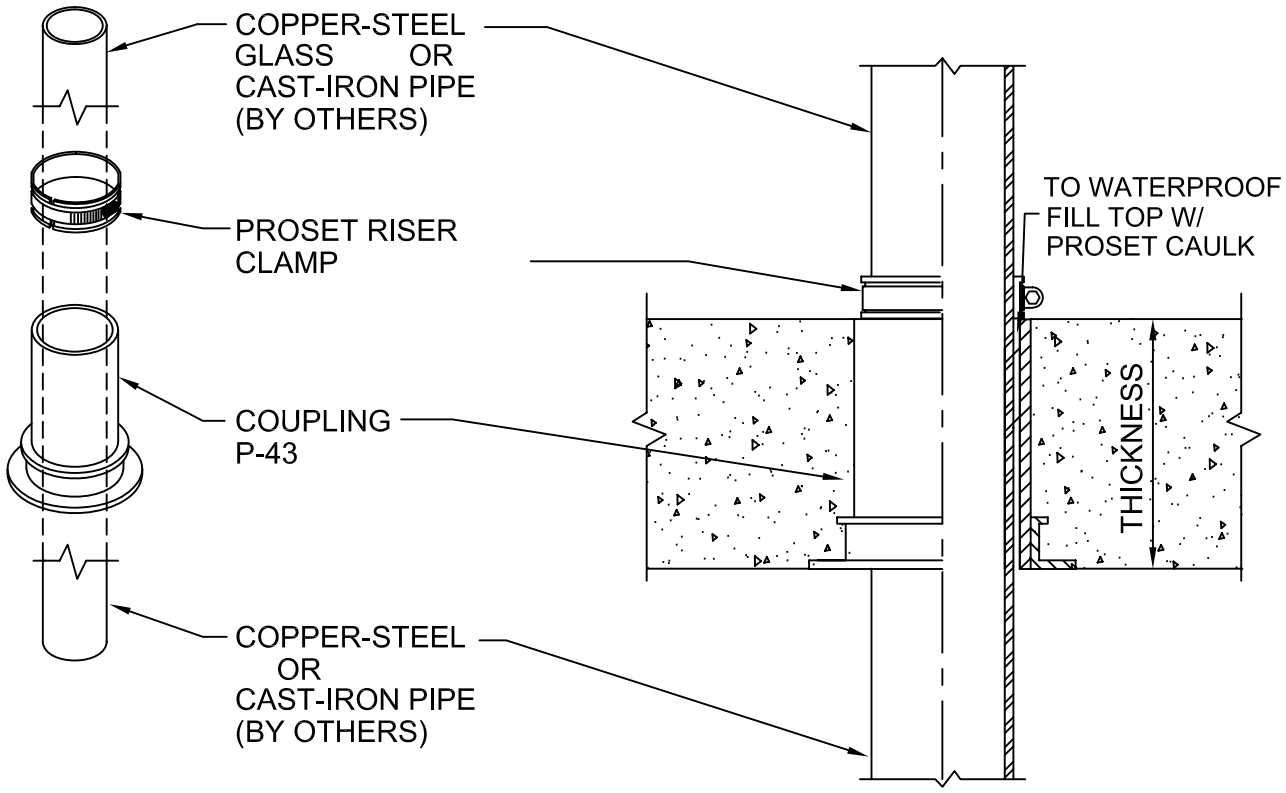

IMPORTANT NOTES :

1. Use nails through flange holes to mount the coupling to deck.
2. After the concrete pour, remove protective cap.
3. Insert the copper, c.i., glass or steel pipe through the coupling.
4. Fill void at top with ProSet caulking to waterproof.
5. Install riser clamp around pipe to support and draft stop. Clamp on both sides for walls.
6. When ordering riser clamp-Use suffix CU for copper-CI for cast iron or S for glass & steel pipe.
7. Use Black letter Sleeve Pipe for glass, steel or cast iron-Red letter pipe for copper.

W.H. Directory Reference 99 Edition
Firestop Device
W.H. Design No. PS/PHV 180-01
F Rating 3 Hrs.

PROSET® SYSTEMS
FIRESTOP PENETRATOR™

DATE : 1-10-06

DRG . NO . A-1014-A

PROSET SLEEVES

Self Seal Stack Assembly

POUR CONCRETE ON WOOD FORM
FOR FLOORS

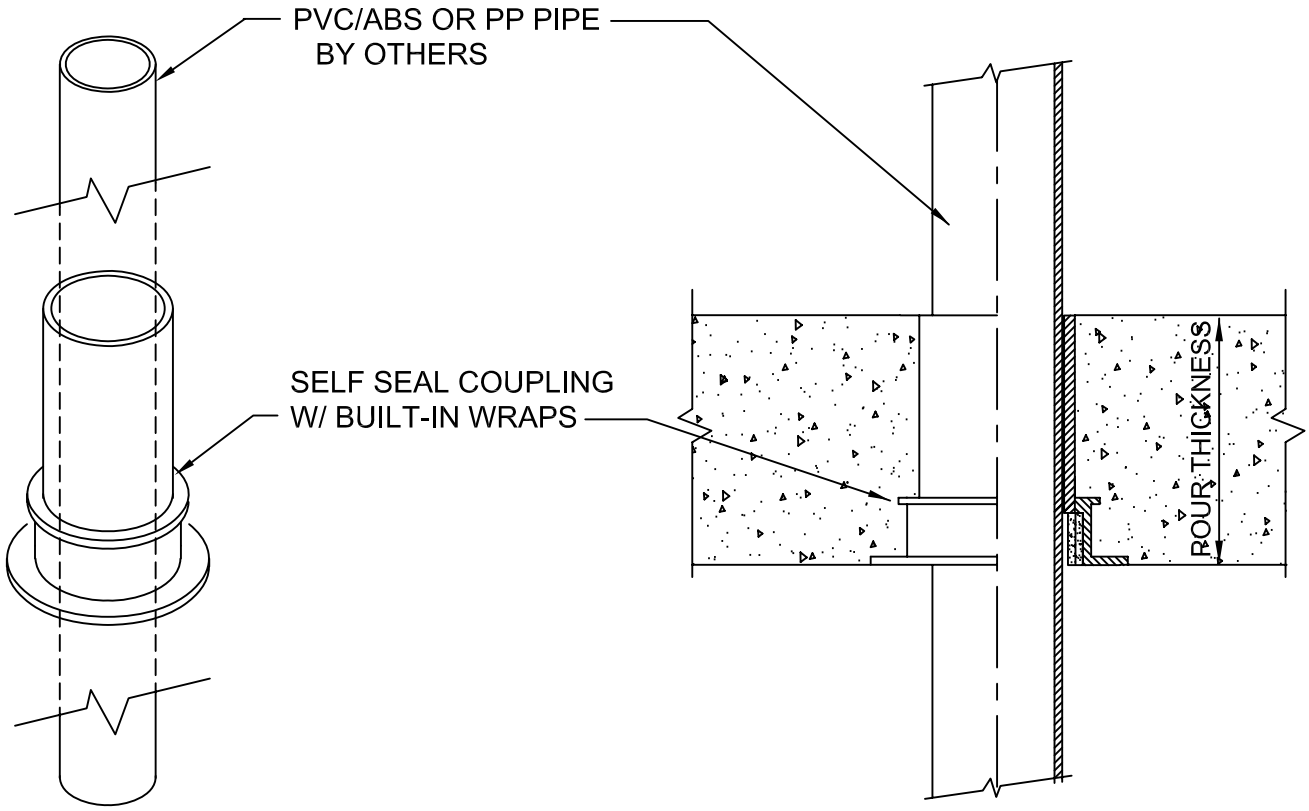

IMPORTANT NOTES :

1. Use nails through flange holes to mount the sleeve coupling to the deck.
2. After concrete is poured, remove protective cap.
3. Insert the through pipe from either the top or the bottom side of the Green lettered coupling.
4. After the pipe is passed through, swab around the top pipe and the sleeves with solvent cement to attach and anchor the pass through piping to the sleeve

Option: The PVC stack piping can be solvent welded into the top and bottom side only when using the "Red" lettered coupling when this is desired.

W.H. Directory Reference 00 Edition
Firestop Device
W.H. Design No. PS/PHV 180-03
F Rating 3 Hrs.

PROSET® SYSTEMS
FIRESTOP PENETRATOR™

DATE : 1-10-06

DRG . NO . C-9049-A

TUB BOX ASSEMBLY

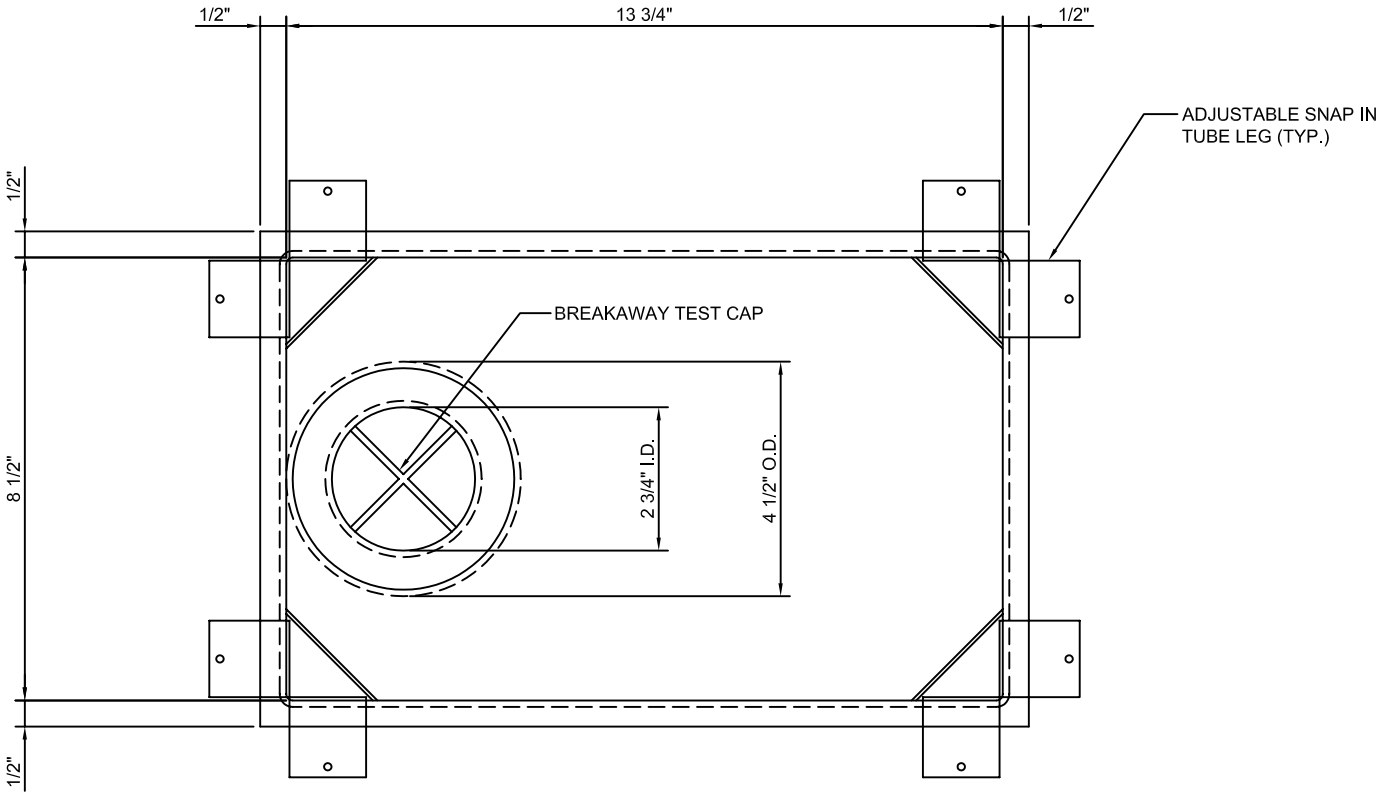

Material for box is high impact polystrene.
Material for adjustable legs is polypropylene

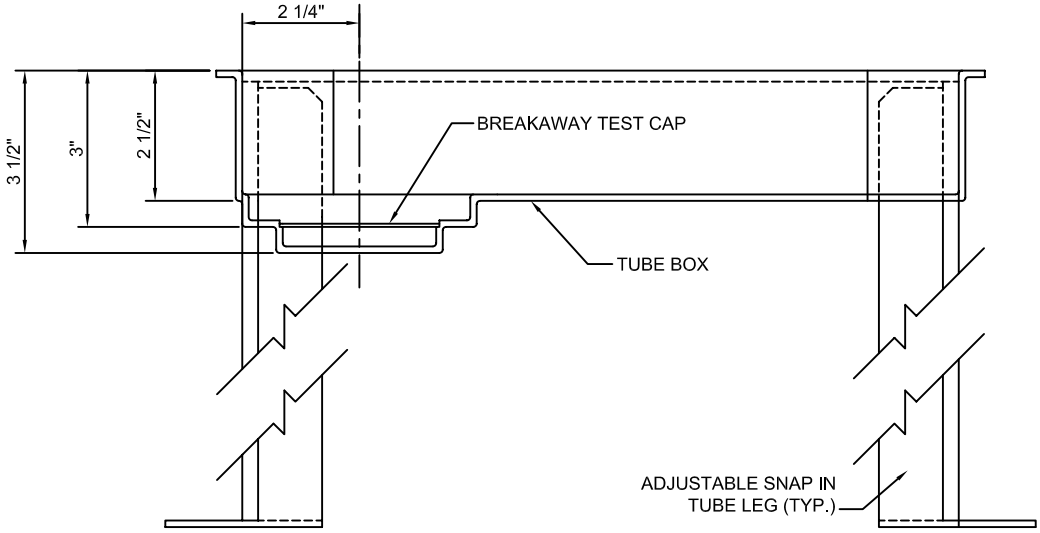

FUNCTION OF COMPONENT

* Provides for a recess in the concrete floor to connect a waste & overflow assembly from bathtub openings
* Extra styrofoam can be used inside the box to lower the recess.

PROSET® SYSTEMS
FIRESTOP PENETRATOR™

DATE : 10-8-03

DWG NO. P-62

PROSEAL CLOSET STUB

CONCRETE ON WOOD OR STEEL FORMS
FOR FLOORS

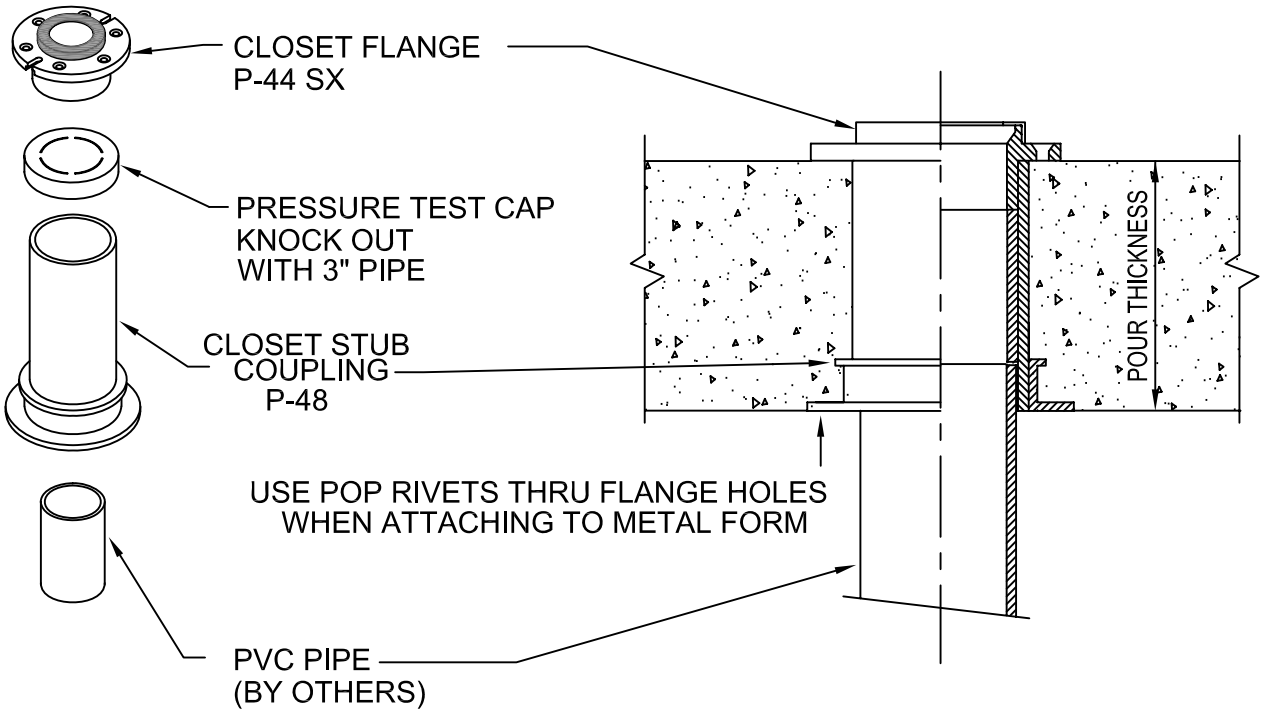

IMPORTANT NOTES :

1. Use nails through the flange holes to mount the Closet Stub to the deck.

2. After the concrete pour, do not remove the test cap until testing is done and * closet is ready to set.

* Use a 3" pipe to knock out cap. The knock out piece will not plug up the drain line

3. Solvent cement the branch piping directly into the bottom of the closet stub.

4. Insert & solvent cement the P-44-SX closet flange with the built-in seal into the stub and set toilet.

* A special P44-HX flange is available in a longer 4" extention lenght if the finished floor is raised.

* The new elastomeric seal on this flange has been tested to hold a 10 ft. head of water pressure.

W.H. Directory Reference 01 Edition
Firestop Device
W.H. Design No. PS/PH 120-15
F Rating 2 & 3 Hrs.

PROSET® SYSTEMS
FIRESTOP PENETRATOR™

DATE : 1-10-06

DRG . NO . C-4402-A

PROSET SLEEVES

X.H. CAST IRON FLOOR DRAIN

FOR 2", 3" OR 4" CONNECTIONS

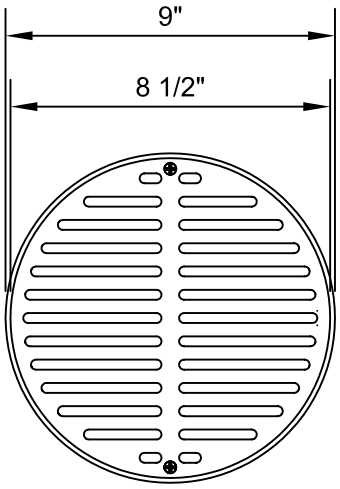

X.H. CAST IRON GRATE

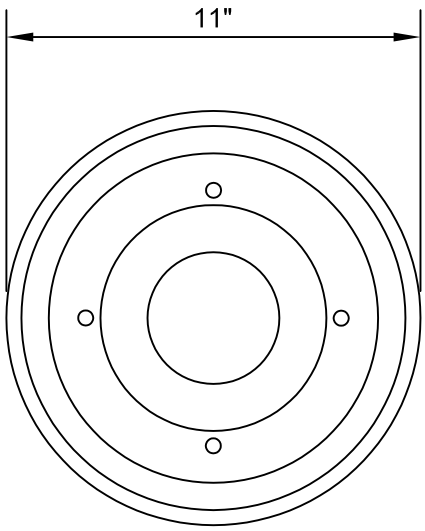

PVC BODY HAS 4 BOLT HOLES

TOP VIEW

GRATE BOLTS TO BASE

1 1/2"

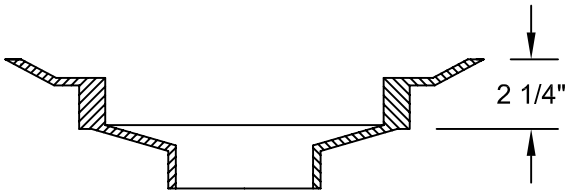

SIDE VIEW

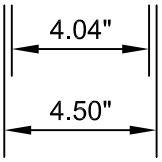

FITS 3" PROSET CPLG.

FITS 4" PROSET CPLG.

FUNCTION OF COMPONENT

* Provides a X.H.tractor grate area drain for heavy load bearing traffic.

PROSET® SYSTEMS
FIRESTOP PENETRATOR™

DATE : 3-28-05

DRG . NO . P-65 X